LEXUS

CT200h

LEXUS HYBRID DRIVE

Hybrid
2011 Model
Emergency Response Guide

© 2011 Toyota Motor Corporation
All rights reserved. This document may not be
altered without the written permission of Toyota Motor Corporation.

11 Lexus CT200h ERG REV – (03/10/11)

Foreword

In December 2010, Lexus released the 2011 Lexus CT200h gasoline-electric hybrid vehicle. To educate and assist emergency responders in the safe handling of the CT200h hybrid technology, Lexus published this CT200h Emergency Response Guide.

High voltage electricity powers the electric motor, generator, air conditioning compressor and inverter/converter. All other automotive electrical devices such as the headlights, radio, and gauges are powered from a separate 12 Volt auxiliary battery. Numerous safeguards have been designed into the CT200h to help ensure the high voltage, approximately 201.6 Volt, Nickel Metal Hydride (NiMH) Hybrid Vehicle (HV) battery pack is kept safe and secure in an accident.

The CT200h utilizes the following electrical systems:

- Maximum 650 Volts AC
- Nominal 201.6 Volts DC
- Maximum 27 Volts AC
- Nominal 12 Volts DC

CT200h Features:

- A boost converter in the inverter/converter that boosts the available voltage to the electric motor to 650 Volts.
- A high voltage Hybrid Vehicle (HV) battery pack rated at 201.6 Volts.
- A high voltage motor driven Air Conditioning (A/C) compressor rated at 201.6 Volts.
- A body electrical system rated at 12 Volts, negative chassis ground.
- Supplemental Restraint System (SRS) - dual stage frontal airbags, front knee airbags, front seat side airbags, side curtain airbags and front seat belt pretensioners.
- An Electric Power Steering (EPS) assist motor rated at 27 Volts.

High voltage electrical safety remains an important factor in the emergency handling of the CT200h Lexus Hybrid Drive. It is important to recognize and understand the disabling procedures and warnings throughout the guide.

Additional topics in the guide include:

- CT200h identification.
- Major Lexus Hybrid Drive component locations and descriptions.
- Extrication, fire, recovery, and additional emergency response information.
- Roadside assistance information.

2011 Model Year CT200h

This guide is intended to assist emergency responders in the safe handling of a CT200h vehicle during an incident.

NOTE:
Emergency Response Guides for Lexus hybrid vehicles may be viewed at http://techinfo.lexus.com.

Table of Contents

	Page
About the CT200h	1
CT200h Identification	2
Lexus Hybrid Drive Component Locations & Descriptions	5
Smart Key System	8
Electronic Shift Selector	10
Lexus Hybrid Drive Operation	11
Hybrid Vehicle (HV) Battery Pack	12
27 Volt System	13
Low Voltage Battery	14
High Voltage Safety	15
SRS Airbags & Seat Belt Pretensioners	16
Emergency Response	18
Extrication	18
Fire	24
Overhaul	25
Recovering/Recycling of NiMH HV Battery Pack	25
Spills	26
First Aid	26
Submersion	27
Roadside Assistance	28

About the CT200h

The CT200h 5-door hatchback joins the LS600h L, RX450h and GS450h as a hybrid model for Lexus. Lexus Hybrid Drive means that the vehicle contains a gasoline engine and an electric motor for power. The two hybrid power sources are stored on board the vehicle:

1. Gasoline stored in the fuel tank for the gasoline engine.
2. Electricity stored in a high voltage Hybrid Vehicle (HV) battery pack for the electric motor.

The result of combining these two power sources is improved fuel economy and reduced emissions. The gasoline engine also powers an electric generator to recharge the battery pack; unlike a pure all electric vehicle, the CT200h never needs to be recharged from an external electric power source.

Depending on the driving conditions one or both sources are used to power the vehicle. The following illustration demonstrates how the CT200h operates in various driving modes.

❶ During light acceleration at low speeds, the vehicle is powered by the electric motor. The gasoline engine is shut off.

❷ During normal driving, the vehicle is powered mainly by the gasoline engine. The gasoline engine also powers the generator to recharge the battery pack.

❸ During full acceleration, such as climbing a hill, both the gasoline engine and the electric motor power the vehicle.

❹ During deceleration, such as when braking, the vehicle regenerates kinetic energy from the front wheels to produce electricity that recharges the battery pack.

❺ While the vehicle is stopped, the gasoline engine and electric motor are off, however the vehicle remains on and operational.

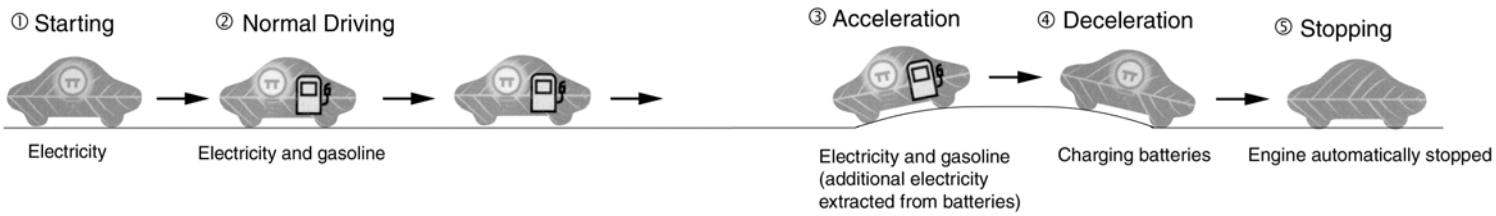

CT200h Identification

In appearance, the 2011 model year CT200h is a 5-door hatchback. Exterior, interior, and engine compartment illustrations are provided to assist in identification.

The alphanumeric 17 character Vehicle Identification Number (VIN) is provided in the front windshield cowl and on the left side B pillar.

Example VIN: JTHKD5BH0C2000101

A CT200h is identified by the first 8 alphanumeric characters **JTHKD5BH**.

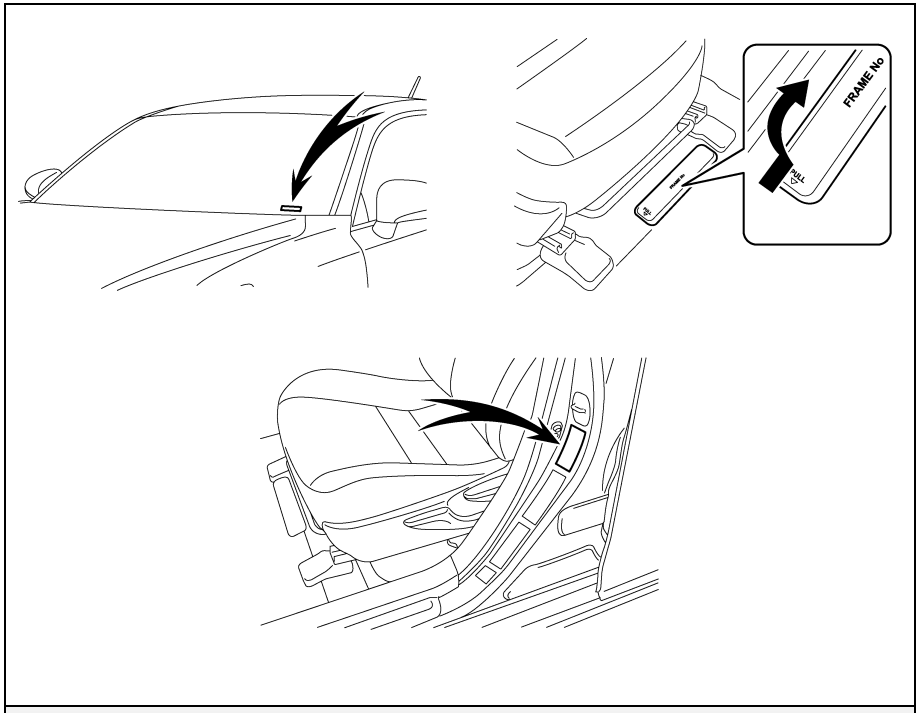

Left Side Windshield Cowl, Right Side Floor and Left Side B Pillar

Exterior

❶ LEXUS and CT200h logos on the hatch.
❷ HYBRID logo on both the rear door panels.
❸ Gasoline fuel filler door located on left side rear quarter panel.

Exterior Left Side View

Exterior Front and Rear View

Exterior Rear and Left Side View

CT200h Identification (Continued)

Interior

❹ Instrument cluster (speedometer, **READY** indicator, shift position indicators, warning lights) located in the dash behind the steering wheel.

❺ A switchable gauge in the instrument cluster showing either a hybrid system indicator or a tachometer depending on driving mode.

NOTE:
If the vehicle is shut off, the instrument cluster gauges will be “blacked out”, not illuminated.

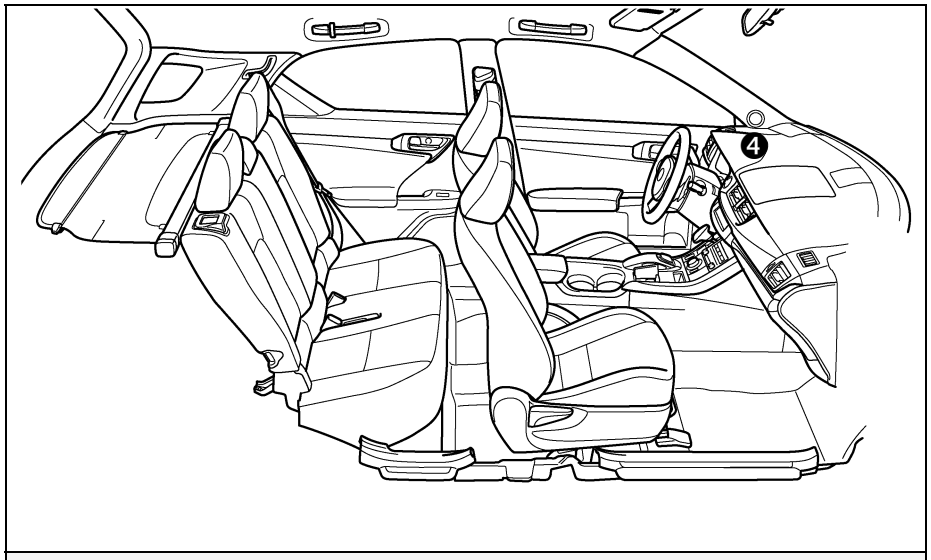

Interior View

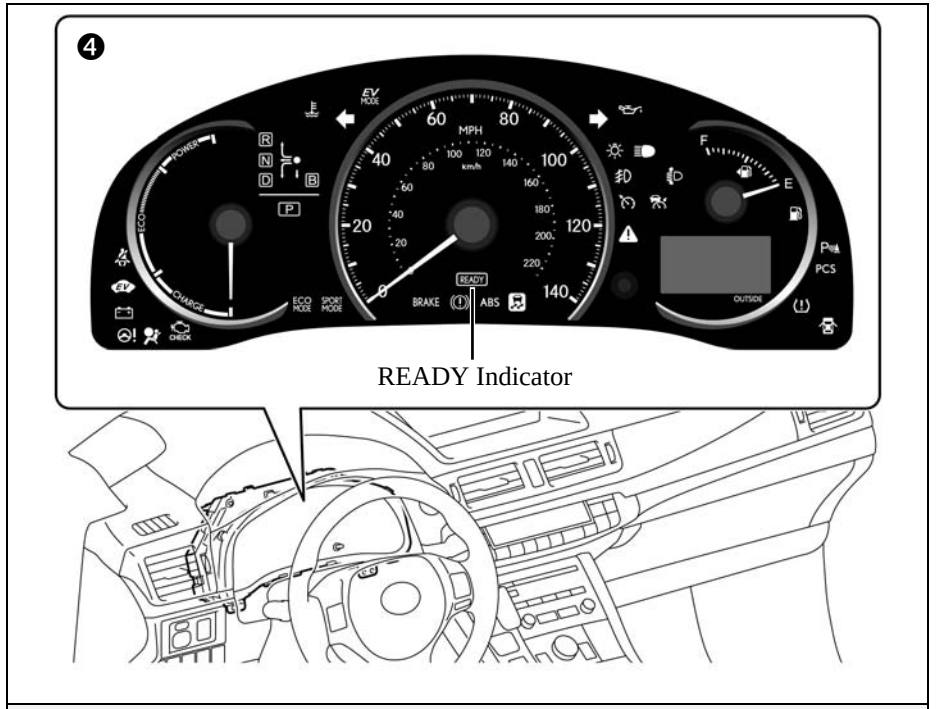

Instrument Cluster View

❺

Tachometer

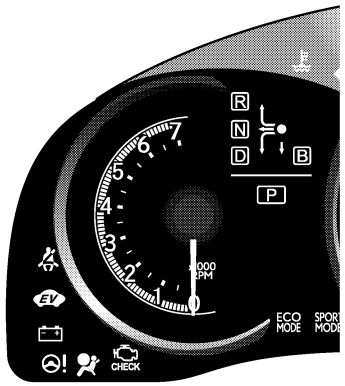

Hybrid System Indicator

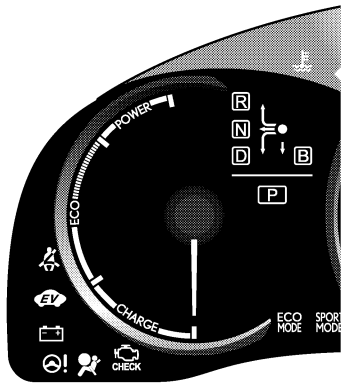

Hybrid System Indicator and Tachometer

CT200h Identification (Continued)

Engine Compartment

❺ 1.8-liter aluminum alloy gasoline engine.

❻ Logo on the plastic engine cover.

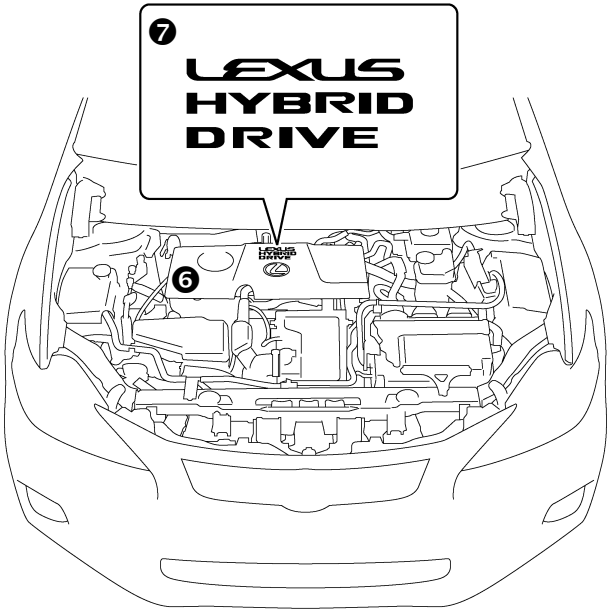

Engine Compartment View

Lexus Hybrid Drive Component Locations & Descriptions

Component	Location	Description
12 Volt ❶ Auxiliary Battery	Right Side of Cargo Area	A lead-acid battery that supplies power to the low voltage devices.
Hybrid ❷ Vehicle (HV) Battery Pack	Cargo Area, Mounted to Cross Member behind Rear Seat	201.6 Volt Nickel Metal Hydride (NiMH) battery pack consisting of 28 low voltage (7.2 Volt) modules connected in series.
Power ❸ Cables	Undercarriage and Engine Compartment	Orange colored power cables carry high voltage Direct Current (DC) between the HV battery pack, inverter/converter, and A/C compressor. These cables also carry 3-phase Alternating Current (AC) between the inverter/converter, electric motor, and generator.
Inverter/ Converter ❹	Engine Compartment	Boosts and inverts the high voltage electricity from the HV battery pack to 3-phase AC electricity that drives the electric motor. The inverter/converter also converts AC electricity from the electric generator and electric motor (regenerative braking) to DC that recharges the HV battery pack.
Gasoline ❺ Engine	Engine Compartment	Provides two functions: 1) Powers vehicle. 2) Powers generator to recharge the HV battery pack. The engine is started and stopped under control of the vehicle computer.
Electric❻ Motor	Engine Compartment	3-phase high voltage AC permanent magnet electric motor contained in the front transaxle. It is used to power the front wheels.
Electric ❼ Generator	Engine Compartment	3-phase high voltage AC generator that is contained in the transaxle and recharges the HV battery pack.

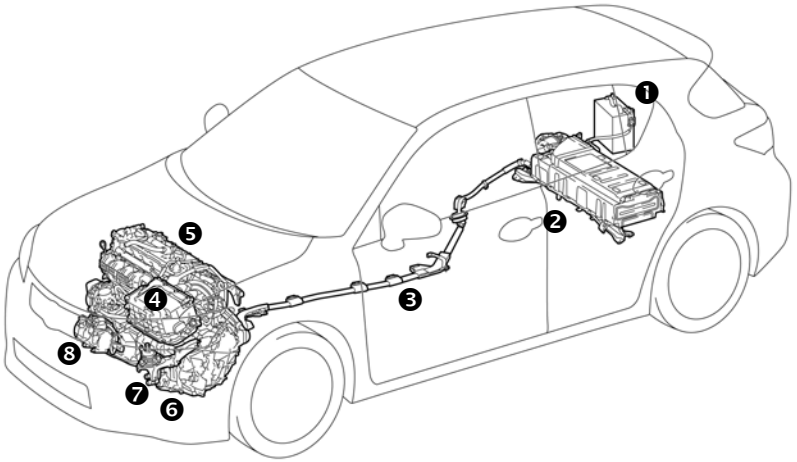

Lexus Hybrid Drive Components

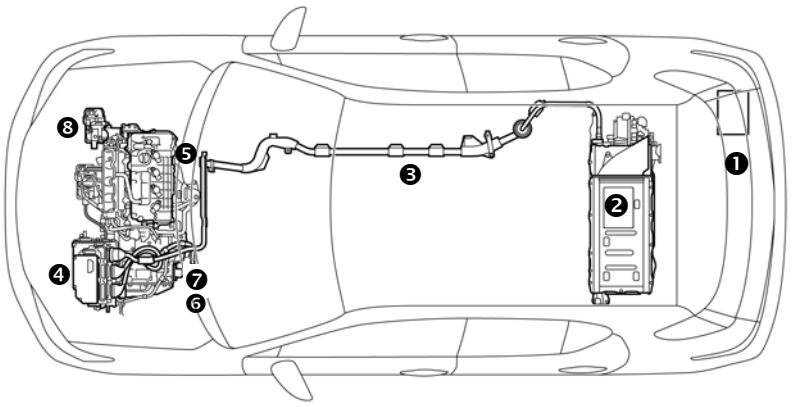

Components (Top View) and High Voltage Power Cables

Lexus Hybrid Drive Component Locations & Descriptions (Continued)

Component	Location	Description
A/C Compressor (with Inverter) ❽	Engine Compartment	3-phase high voltage AC electrically driven motor compressor.
Fuel Tank and Fuel Line ❾	Undercarriage and Center	The fuel tank provides gasoline via a fuel line to the engine. The fuel line is routed under the center of vehicle.

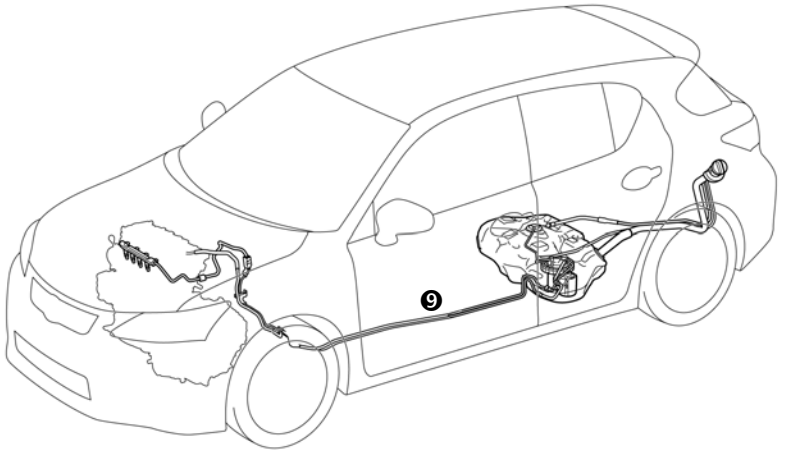

Fuel Tank and Fuel Line

Lexus Hybrid Drive Component Locations & Descriptions (Continued)

Key Specifications:

Gasoline Engine:	98 hp (73 kW), 1.8-liter Aluminum Alloy Engine
Electric Motor:	80 hp (60 kW), Permanent Magnet Motor
Transmission:	Automatic Only (electrically controlled continuously variable transaxle)
HV Battery:	201.6 Volt Sealed NiMH-Battery
Curb Weight:	3,230 lbs/1,465 kg
Fuel Tank:	11.9 gals/45.0 liters
Frame Material:	Steel Unibody
Body Material:	Steel Panels except for Aluminum Hood and Hatch
Seating Capacity:	5 passenger

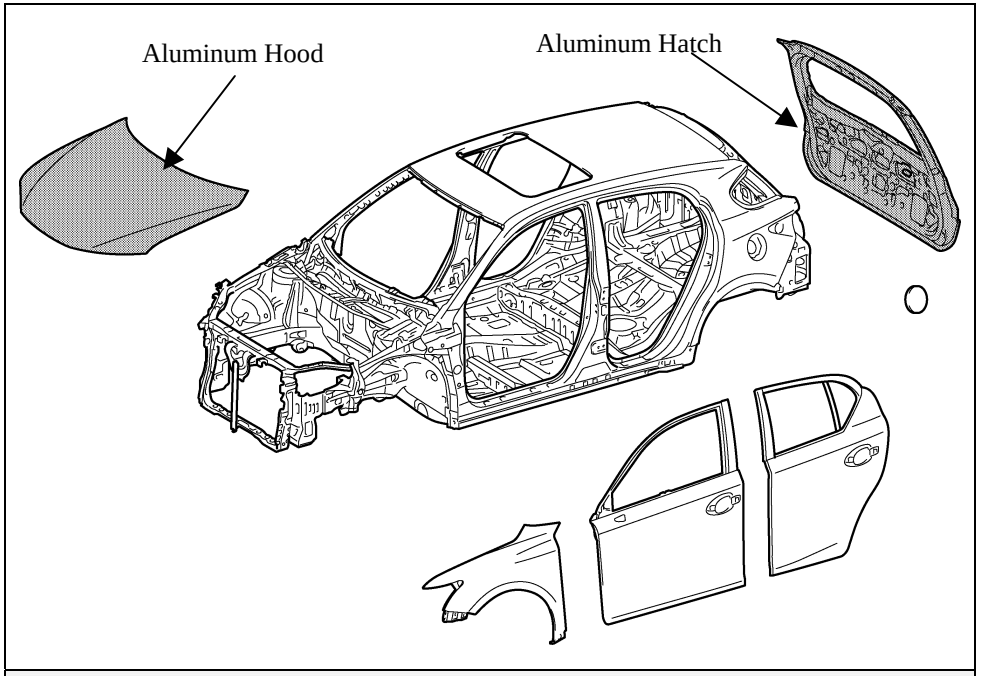

Steel Unibody

Smart Key System

The CT200h smart key system consists of a smart key transceiver that communicates bi-directionally, enabling the vehicle to recognize the smart key in proximity to the vehicle. Once recognized, the smart key will allow the user to lock and unlock the doors without pushing smart key buttons, and start the vehicle without inserting it into an ignition switch.

Smart key features:

- Passive (remote) function to lock/unlock the doors and start the vehicle.
- Wireless transmitter buttons to lock/unlock all 5 doors.
- Hidden metal cut key to lock/unlock the doors and glove box.

The CT200h is equipped with 2 types of smart keys:

- Smart key (fob)
- Card smart key (optional)

The card smart key is designed to be stored in a wallet and has all the same functions as the smart key (fob), except push buttons.

<u>Door (Lock/Unlock)</u>

There are several methods available to lock/unlock the doors.

- Pushing the smart key lock button will lock all doors. Pushing the smart key unlock button once unlocks the driver door, twice unlocks all doors.

- Touching the sensor on the backside of the driver door exterior handle, with the smart key in proximity to the vehicle, unlocks the driver door. Touching the sensor on the backside of the front passenger door exterior handle, with the smart key in proximity to the vehicle, unlocks all doors. Touching the lock touch sensor on either front door, or pushing the hatch lock button will lock all doors.

- Inserting the hidden metal cut key in the driver door lock and turning clockwise once unlocks the driver door, twice unlocks all doors. To lock all doors turn the key counter clockwise once. Only the driver door contains an exterior door lock for the metal cut key.

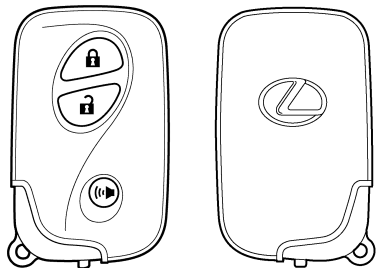

Smart Key (Fob)

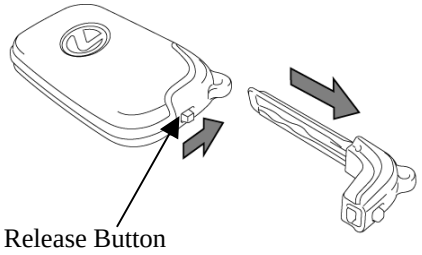

Hidden Metal Cut Key for Door Lock

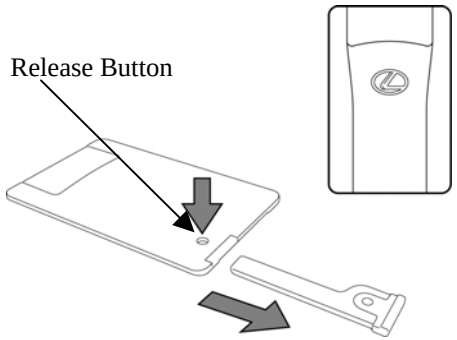

Optional Card Smart Key and Hidden Metal Cut Key for Door Lock

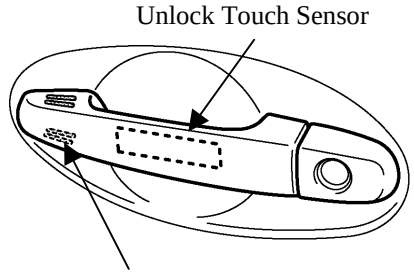

Driver Door Unlock Touch Sensor and Lock Touch Sensor

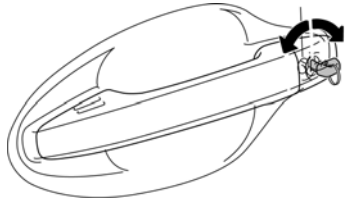

Use the Hidden Metal Cut Key

Front Driver Door Lock

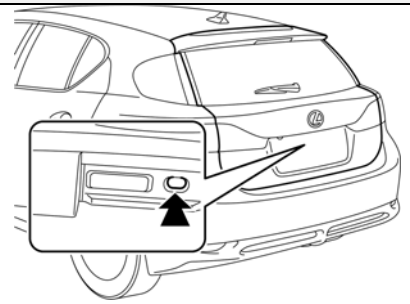

Hatch Lock Button

Smart Key System (Continued)

Vehicle Starting/Stopping

The smart key has replaced the conventional metal cut key, and the power button with an integral status indicator light has replaced the ignition switch. The smart key only needs to be in proximity to the vehicle to allow the system to function.

- With the brake pedal released, the first push of the power button operates the accessory mode, the second push operates the ignition-on mode, and the third push turns the ignition off again.

Ignition Mode Sequence (brake pedal released):

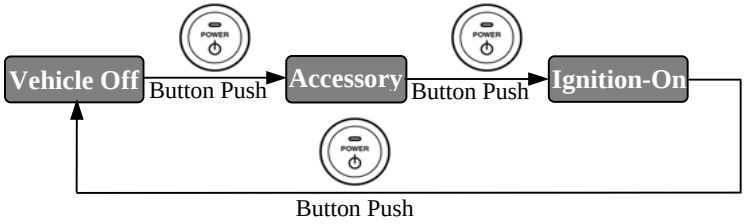

- Starting the vehicle takes priority over all other ignition modes and is accomplished by depressing the brake pedal and pushing the power button once. To verify the vehicle has started, check that the power button status indicator light is off and the **READY** light is illuminated in the instrument cluster.

- If the internal smart key battery is dead, use the following method to start the vehicle.
  1. Touch the Lexus emblem side of the smart key to the power button.
  2. Within the 10 seconds after the buzzer sounds, push the power button with the brake pedal depressed (the **READY** light will illuminate).

- Once the vehicle has started and is on and operational (**READY**-ON), the vehicle is shut off by bringing the vehicle to a complete stop and then depressing the power button once.

- To shut off the vehicle before coming to a stop in an emergency, push and hold down the power button for more than 3 seconds or push the power switch 3 times or more in a row. This procedure may be useful at an accident scene in which the **READY** indicator is on, park (P) cannot be selected, and the drive wheels remain in motion.

Ignition Mode	Power Button Indicator Light
Off	Off
Accessory	Amber
Ignition-On	Amber
Brake Pedal Depressed	Green
Vehicle Started (READY-ON)	Off
Malfunction	Blinking Amber

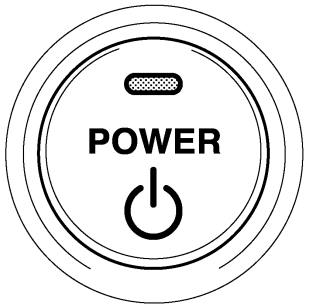

Power Button with Integral Status Indicator Light

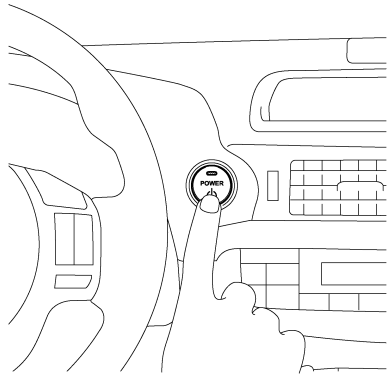

Ignition Modes (Brake Pedal Released)

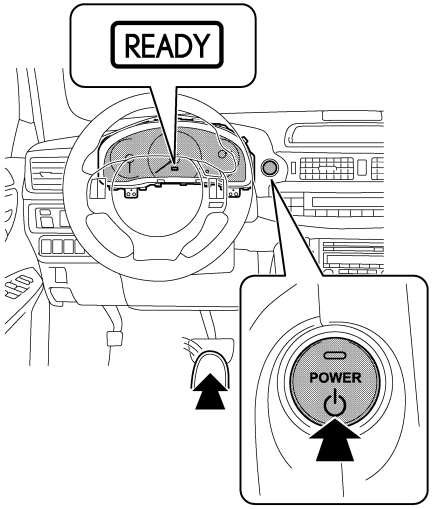

Starting Sequence (Brake Pedal Depressed)

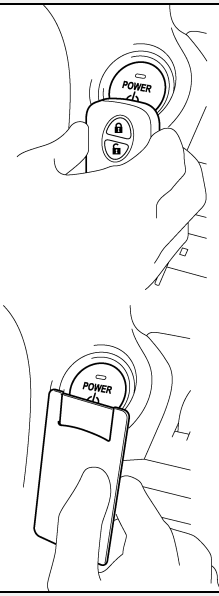

Smart Key Recognition (When Smart Key Battery is Dead)

Electronic Shift Selector

The CT200h electronic shift selector is a momentary select shift-by-wire system that can be used to select reverse (R), neutral (N), drive (D), or engine brake (B) states.

- These states may only be selected while the vehicle is on and operational (READY-on), except for neutral (N) which may also be selected while in the ignition-on mode. After R, N, D, or B is selected, the transaxle remains in that state, identified on the instrument cluster, but the shift selector returns to the home position. To select neutral (N), it is necessary to hold the shift selector in the N position for approximately 0.5 seconds.

- Unlike a conventional vehicle, the electronic shift selector does not contain a park (P) position. Instead, a separate **P** switch located below the shift selector selects park (P).

- When the vehicle is stopped, regardless of shift state, the electro-mechanical parking lock pawl is engaged to lock the transaxle into park (P) by either pressing the P switch or pressing the power button to shut off the vehicle.

- Being electronic, the shift selector and park (P) systems depend on the low voltage 12 Volt auxiliary battery for power. If the 12 Volt auxiliary battery is discharged or disconnected, the vehicle cannot be started and cannot be shifted into or out of park (P). There is no manual override except to reconnect the auxiliary battery or jump start the vehicle, refer to Jump Starting on page 31.

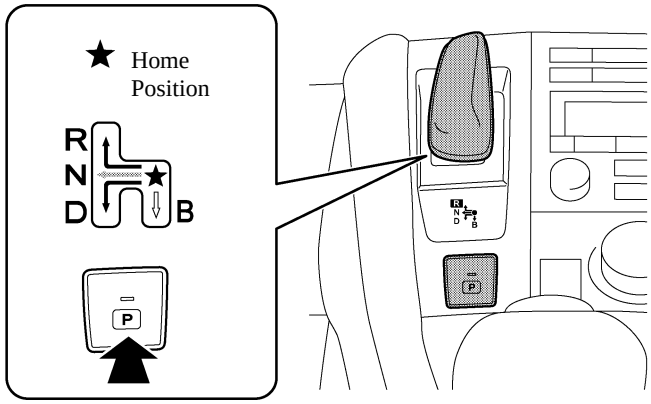

Electronic Shift Selector and P Switch

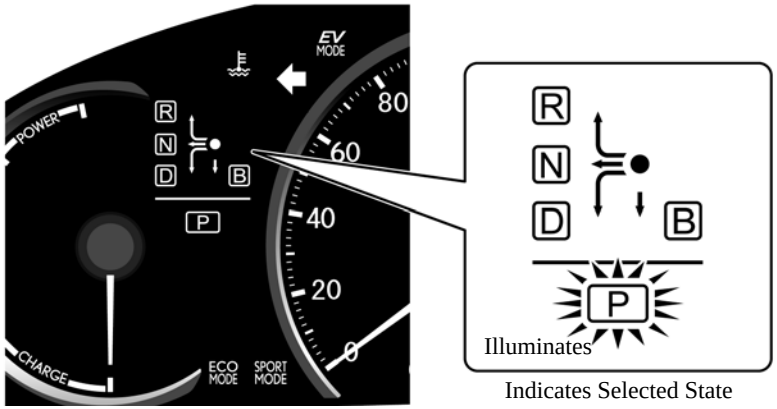

Instrument Cluster Shift State Indicator

Lexus Hybrid Drive Operation

Once the **READY** indicator is illuminated in the instrument cluster, the vehicle may be driven. However, the gasoline engine does not idle like a typical automobile and will start and stop automatically. It is important to recognize and understand the **READY** indicator provided in the instrument cluster. When lit, it informs the driver that the vehicle is on and operational even though the gasoline engine may be off and the engine compartment is silent.

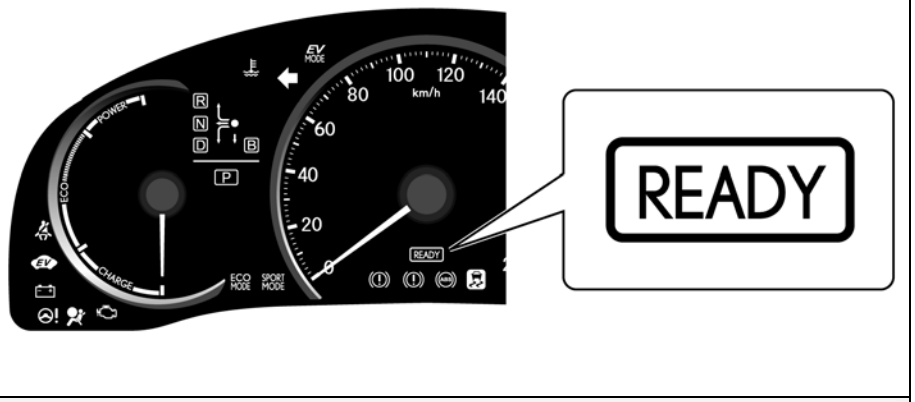

Instrument Cluster **READY** Indicator

Vehicle Operation

- With the CT200h, the gasoline engine may stop and start at any time while the **READY** indicator is on.

- Never assume that the vehicle is shut off just because the engine is off. Always look for the **READY** indicator status. The vehicle is shut off when the **READY** indicator is off.

- The vehicle may be powered by:
    1. The electric motor only.
    2. The gasoline engine only.
    3. A combination of both the electric motor and the gasoline engine.

- The vehicle computer determines how the vehicle operates in order to improve fuel economy and reduce emissions. Three features on the 2011 CT200h are EV (Electric Vehicle) mode, Sport mode and ECO (Economy) mode:
    1. EV Mode: When activated, and certain conditions have been met, the vehicle operates with the electric motor powered by the HV battery.
    2. ECO Mode: Compared to Normal mode, when activated, ECO mode helps enhance fuel economy on trips that involve frequent braking and acceleration.
    3. Sport Mode: Compared to Normal mode, when activated, Sport mode optimizes acceleration feel by increasing the power output more quickly at the beginning of accelerator pedal operation. When Sport mode is selected, the tachometer is displayed in the instrument cluster instead of the Hybrid System Indicator.

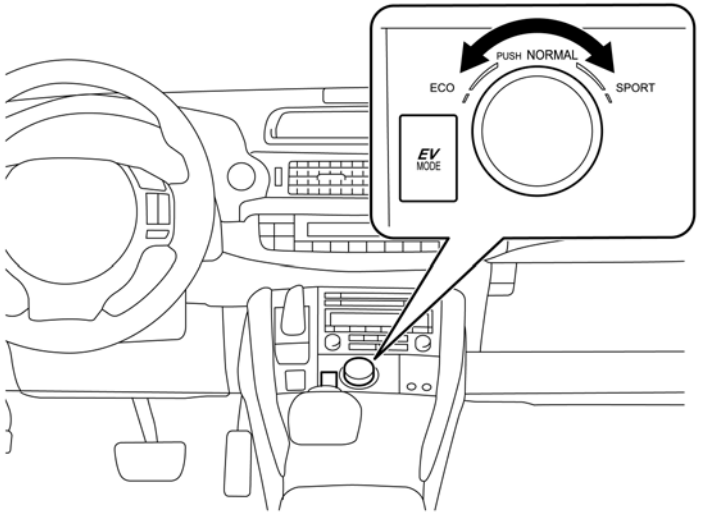

EV Drive Mode Switch, Normal, ECO and Sport Switch

Hybrid Vehicle (HV) Battery Pack

The CT200h features a high voltage Hybrid Vehicle (HV) battery pack that contains sealed Nickel Metal Hydride (NiMH) battery modules.

HV Battery Pack

- The HV battery assembly is enclosed in a metal case and is rigidly mounted to the cross member in the cargo area behind the rear seat. The metal case is isolated from high voltage and concealed by a carpeted panel in the cabin area.
- The HV battery pack consists of 28 low voltage (7.2 Volt) NiMH battery modules connected in series to produce approximately 201.6 Volts. Each NiMH battery module is non-spillable and in a sealed case.
- The electrolyte used in the NiMH battery module is an alkaline mixture of potassium and sodium hydroxide. The electrolyte is absorbed into the battery cell plates and will not normally leak, even in a collision.

HV Battery Pack	
Battery pack voltage	201.6 V
Number of NiMH battery modules in pack	28
NiMH battery module voltage	7.2 V
NiMH battery module dimensions	5 x 1 x 11 in (118 x 20 x 276 mm)
NiMH module weight	2.3 lbs (1.04 kg)
NiMH battery pack dimensions	15 x 40 x 9 in (387 x 1011 x 225 mm)
NiMH battery pack weight	90 lbs (41 kg)

Note: Values in inches have been rounded

Components Powered by the HV Battery Pack

- Electric Motor
- Power Cables
- Electric Generator
- Inverter/Converter
- A/C Compressor

HV Battery Pack Recycling

- The HV battery pack is recyclable. Contact the nearest Lexus dealer.

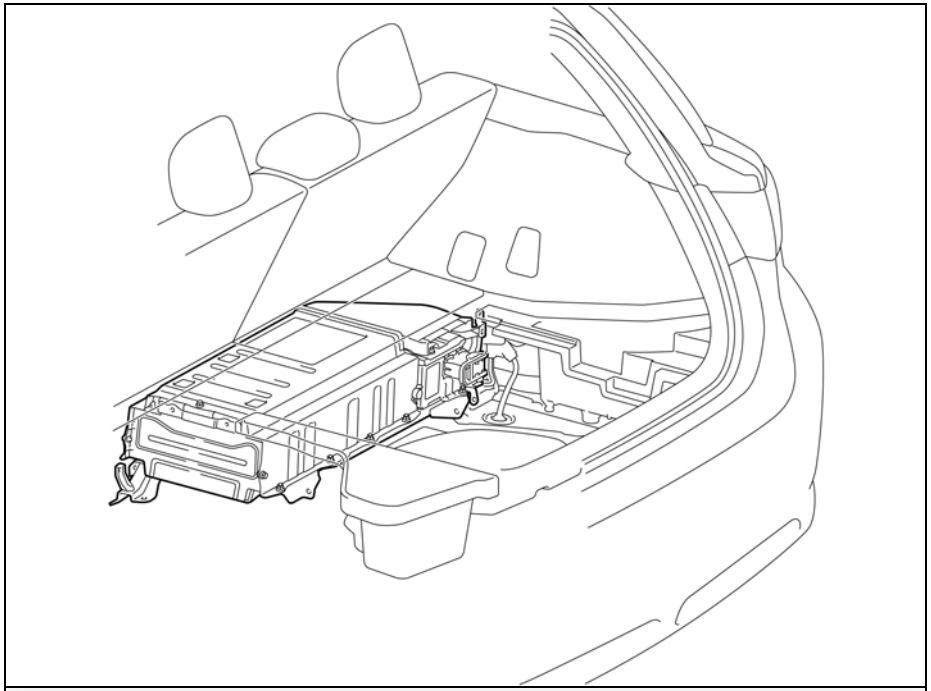

HV Battery Pack

27 Volt System

The CT200h is equipped with a 27 Volt AC assist motor for the Electric Power Steering (EPS) system. The EPS computer generates 27 Volts from the 12 Volt system. The 27 Volt wires are isolated from the metal chassis and routed a short distance from the EPS computer to the EPS assist motor in the steering column.

NOTE:
27 Volts AC has a higher arc potential than 12 Volts DC.

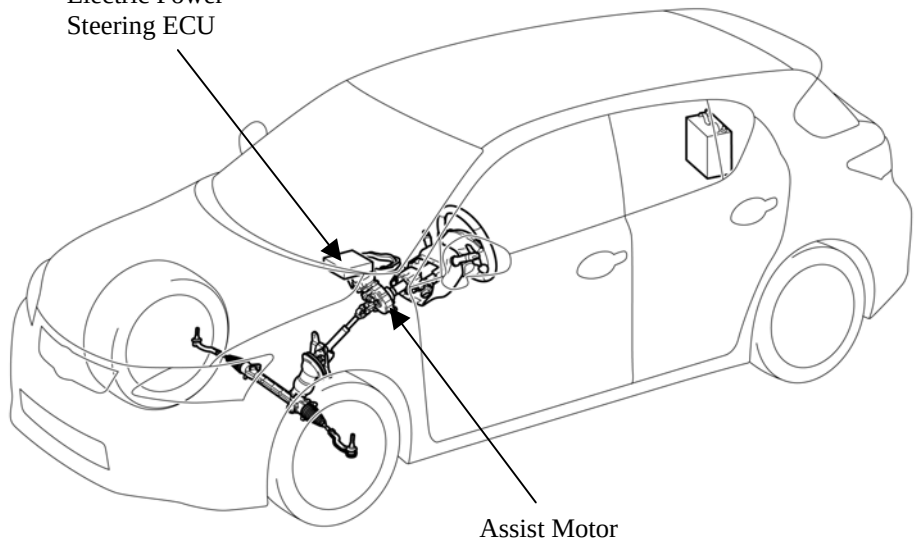

27 Volt Electric Power Steering System

Low Voltage Battery

Auxiliary Battery

- The CT200h contains a sealed lead-acid 12 Volt battery. The 12 Volt auxiliary battery powers the vehicle's electrical system similar to a conventional vehicle. As with conventional vehicles, the negative terminal of the auxiliary battery is grounded to the metal chassis of the vehicle.

- The auxiliary battery is located in the cargo area. It is concealed by a fabric cover on the right side in the rear quarter panel well.

  NOTE:
  An under hood label shows the location of the HV battery (traction battery) and 12 Volt auxiliary battery.

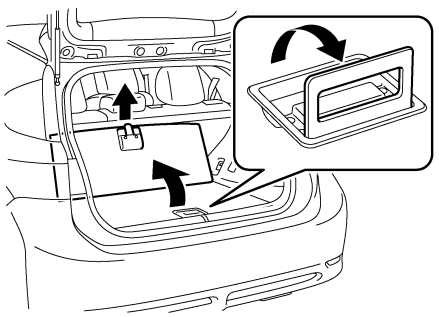

Open Center and Right Side Auxiliary Box

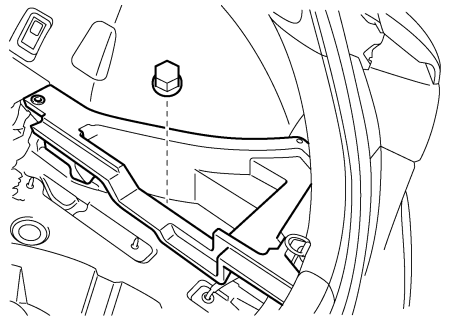

Remove Center and Right Side Auxiliary Box

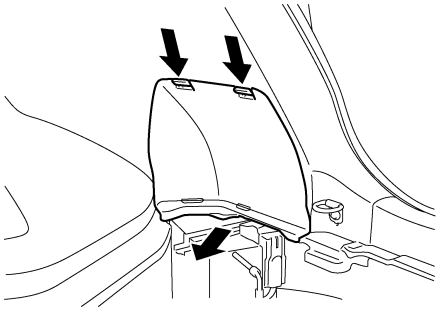

Remove Battery Cover

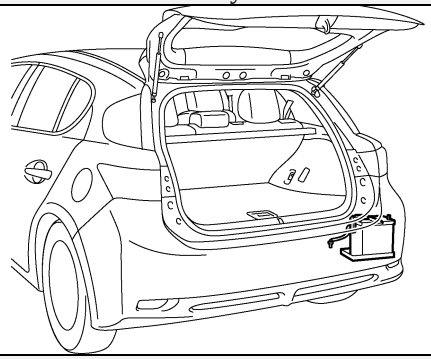

12 Volt Auxiliary Battery Mounted in Cargo Area

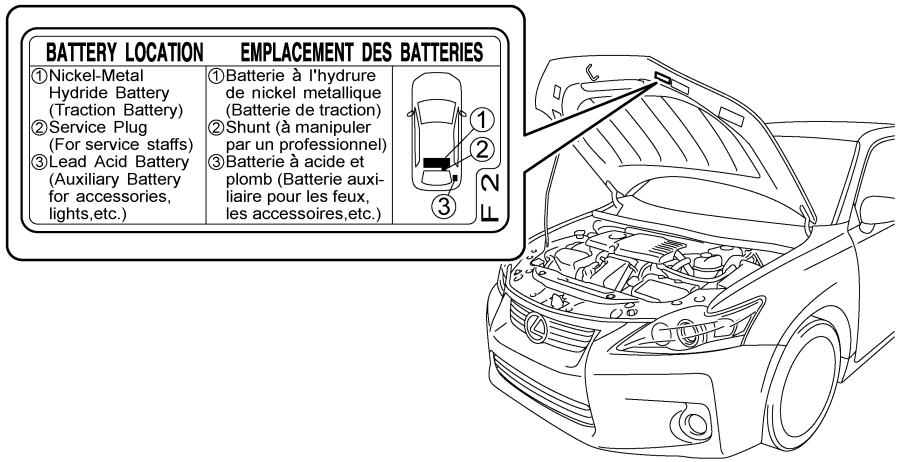

Battery Location Label

High Voltage Safety

The HV battery pack powers the high voltage electrical system with DC electricity. Positive and negative orange colored high voltage power cables are routed from the battery pack, under the vehicle floor pan, to the inverter/converter. The inverter/converter contains a circuit that boosts the HV battery voltage from 201.6 to 650 Volts DC. The inverter/converter creates 3-phase AC to power the motor. Power cables are routed from the inverter/converter to each high voltage motor (electric motor, electric generator, and A/C compressor). The following systems are intended to help keep occupants in the vehicle and emergency responders safe from high voltage electricity:

<u>High Voltage Safety System</u>

- A high voltage fuse ❶ provides short circuit protection in the HV battery pack.

- Positive and negative high voltage power cables ❷ connected to the HV battery pack are controlled by 12 Volt normally open relays ❸. When the vehicle is shut off, the relays stop electrical flow from leaving the HV battery pack.

⚠WARNING:
The high voltage system may remain powered for up to 10 minutes after the vehicle is shut off or disabled. To prevent serious injury or death from severe burns or electric shock, avoid touching, cutting, or breaching any orange high voltage power cable or high voltage component.

- Both positive and negative power cables ❷ are insulated from the metal body. High voltage electricity flows through these cables and not through the metal vehicle body. The metal vehicle body is safe to touch because it is insulated from the high voltage component.

- A ground fault monitor ❹ continuously monitors for high voltage leakage to the metal chassis while the vehicle is running. If a malfunction is detected, the hybrid vehicle computer ❹ will illuminate the master warning light ⚠ in the instrument cluster and indicate "Check Hybrid System" on the multi-information display.

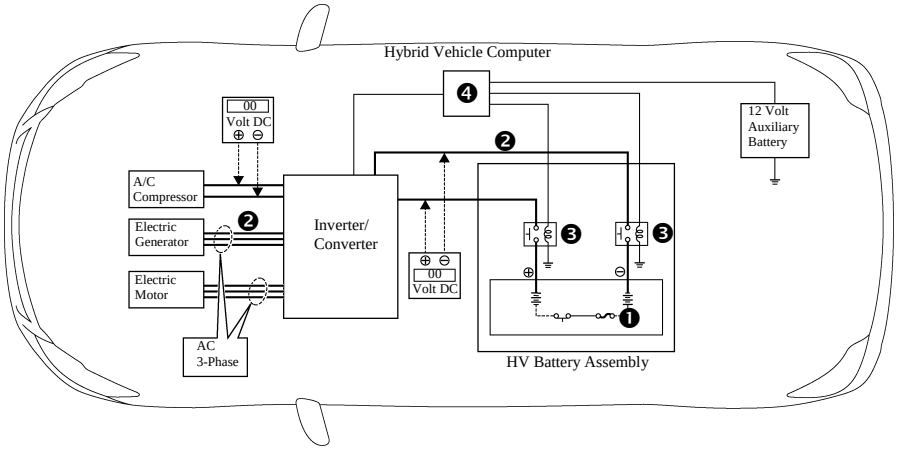

High Voltage Safety System – Vehicle Shut Off (**READY**-OFF)

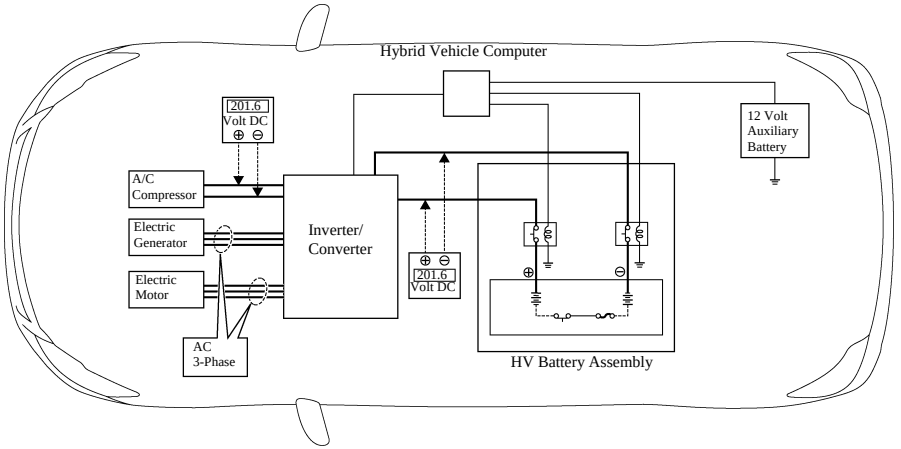

High Voltage Safety System – Vehicle On and Operational (**READY**-ON)

SRS Airbags & Seat Belt Pretensioners

Standard Equipment

- Electronic frontal impact sensors (2) are mounted in the engine compartment ❶ as illustrated.
- Front seat belt pretensioners are mounted near the base of the B-pillars ❷.
- A frontal dual stage driver airbag ❸ is mounted in the steering wheel hub.
- A frontal twin-chamber shaped dual stage passenger airbag ❹ is integrated into the dashboard and deploys through the top of the dashboard.
- The SRS computer ❺, which contains an impact sensor, is mounted on the floor pan underneath the instrument panel.
- Front electronic side impact sensors (2) are mounted near the base of the B-pillars. ❻
- Rear electronic side impact sensors (2) are mounted near the base of the C-pillars. ❼
- Front seat side airbags ❽ are mounted in the front seatbacks.
- Side curtain airbags ❾ are mounted along the outer edge inside the roof rails.
- Front knee airbags (2) ❿ are mounted on the lower portion of the dash.

Optional Equipment

- The optional pre-crash safety system contains a radar sensory system and an electric motor-pyrotechnic pretensioner system. During a pre-collision event, an electric motor in the pretensioners retracts the front seatbelts. When conditions stabilize the electric motor will reverse itself. When the airbags deploy, or as necessary, the pyrotechnic pretensioners function normally.

⚠ **WARNING:**
The SRS may remain powered for up to 90 seconds after the vehicle is shut off or disabled. To prevent serious injury or death from unintentional SRS deployment, avoid breaching the SRS components.

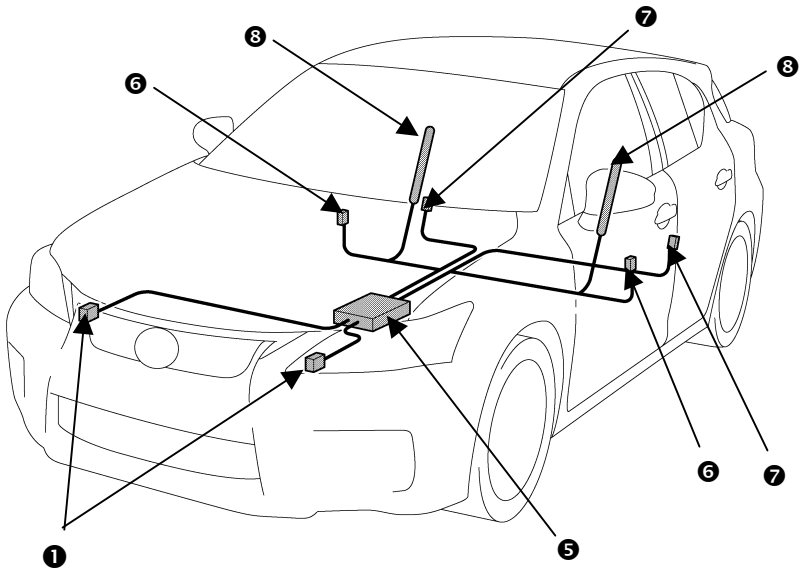

Electronic Impact Sensors and Side Airbags

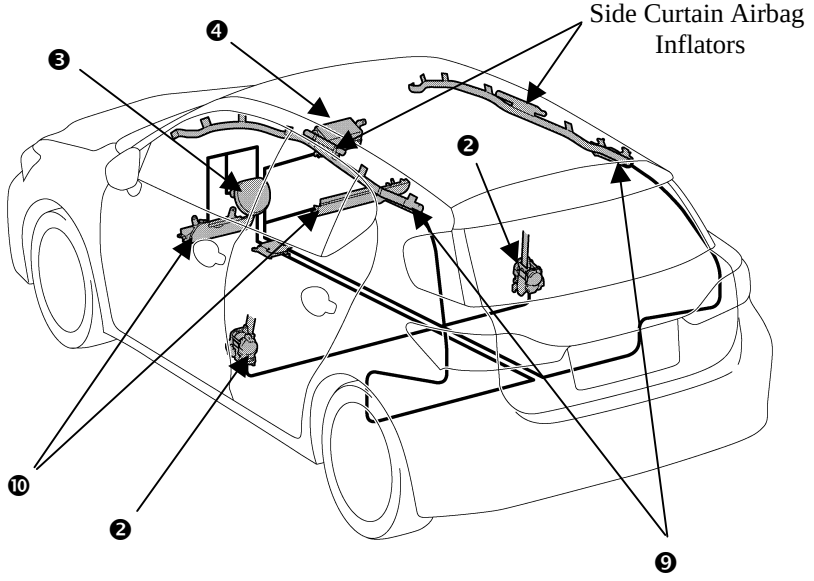

Standard Frontal Airbags, Seat Belt Pretensioners, Front Knee Airbags, Side Curtain Airbags

SRS Airbags & Seat Belt Pretensioners (Continued)

NOTE:
The front seatback mounted side airbags and the side curtain airbags may deploy independently of each other.

The knee airbags deploy simultaneously with the frontal airbags.

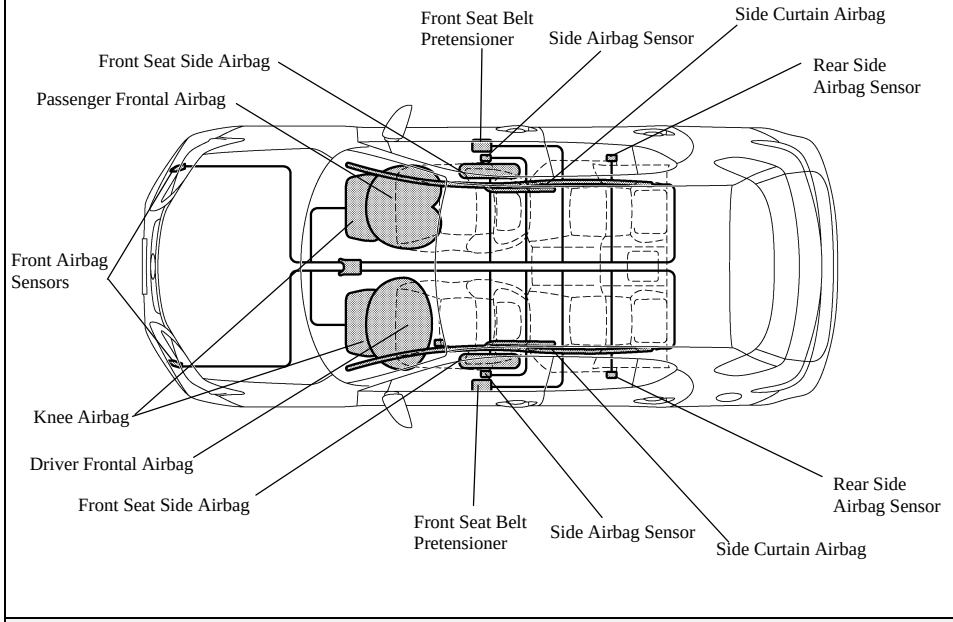

SRS System Diagram

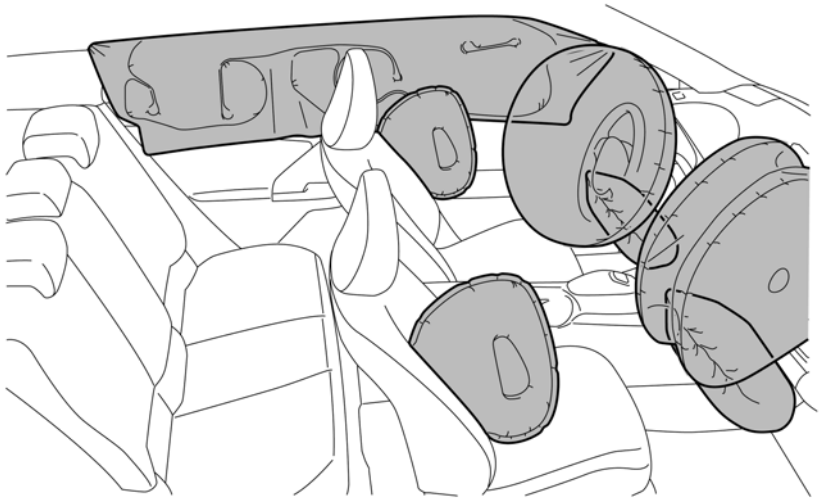

Frontal, Knee, Front Seatback Mounted Side, Side Curtain Airbags

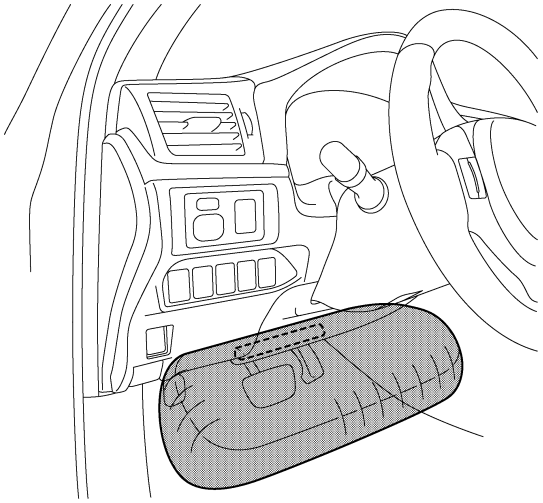

Driver Knee Airbag and Inflator

Emergency Response

On arrival, emergency responders should follow their standard operating procedures for vehicle incidents. Emergencies involving the CT200h may be handled like other automobiles except as noted in these guidelines for Extrication, Fire, Overhaul, Recovery, Spills, First Aid, and Submersion.

⚠WARNING:

- ***Never*** *assume the CT200h is shut off simply because it is silent.*
- *Always observe the instrument cluster for the* ***READY*** *indicator status to verify whether the vehicle is on or shut off. The vehicle is shut off when the* ***READY*** *indicator is off.*
- *Failure to shut off the vehicle before emergency response procedures are performed may result in serious injury or death from the unintentional deployment of the SRS or severe burns and electric shock from the high voltage electrical system.*

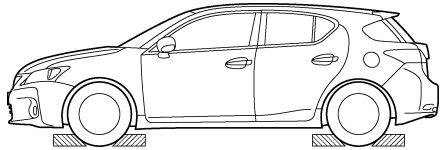

Chock Wheels

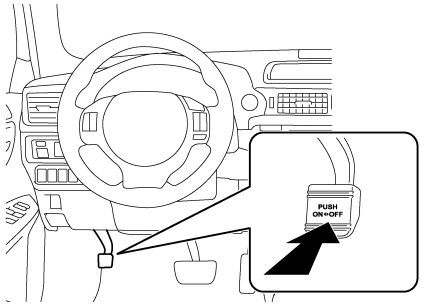

Set Parking Brake

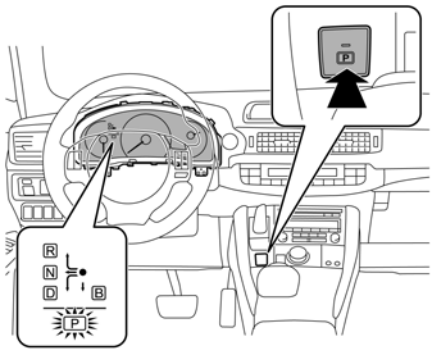

Push P Switch

Extrication

- Immobilize Vehicle

  Chock wheels and set the parking brake.
  Push the **P** switch to engage park (P).

- Disable Vehicle

  Performing either of the following two procedures will shut the vehicle off and disable the HV battery pack, SRS, and gasoline fuel pump.

Emergency Response (Continued)

Extrication (Continued)

Procedure #1

1. Confirm the status of the **READY** indicator in the instrument cluster.
2. If the **READY** indicator is illuminated, the vehicle is on and operational. Shut off the vehicle by pushing the power button once.
3. The vehicle is already shut off if the instrument cluster lights and the **READY** indicator are not illuminated. Do **not** push the power button because the vehicle may start.
4. If the smart key is easily accessible, keep it at least 16 feet (5 meters) away from the vehicle.
5. If the smart key cannot be found, disconnect the 12 Volt auxiliary battery behind the cover in the cargo area to prevent accidental restarting of the vehicle.

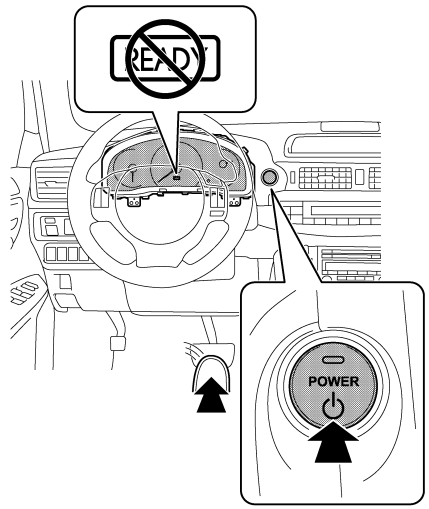

Shut Off Vehicle (**READY**-OFF)

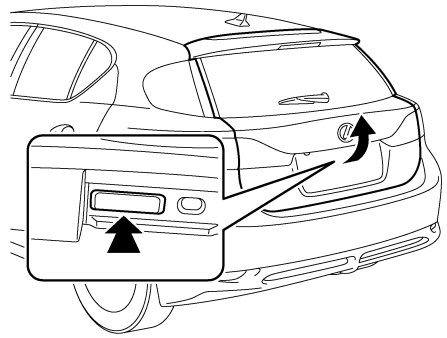

Open the Hatch

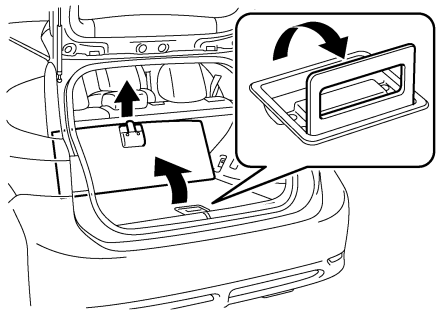

Open Center and Right Side Auxiliary Box

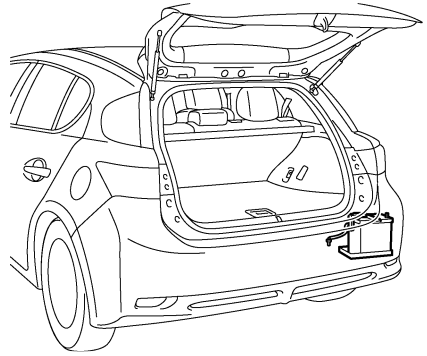

12 Volt Auxiliary Battery Mounted in Cargo Area

Emergency Response (Continued)

Extrication (Continued)

Procedure #2 (Alternate if power button is inaccessible)

1. Open the hood.
2. Remove the fuse box cover.
3. Remove the **IGCT** fuse (30A green colored) and **AM2** fuse (7.5A brown colored) in the engine compartment fuse box (refer to illustration). If the correct fuse cannot be recognized, pull all fuses in the fuse box.
4. Disconnect the 12 Volt auxiliary battery under the cover in the cargo area.

NOTE:
Before disconnecting the 12 Volt auxiliary battery, if necessary, reposition the optional power seats, lower the windows, unlock the doors, and open the fuel door as required. An electric fuel door opener switch is located on the lower dash panel to the left of the steering wheel. A manual fuel door release is located inside the driver side cargo area (refer to illustrations in the Roadside Assistance section on page 29). Once the 12 Volt auxiliary battery is disconnected, power controls will not operate.

⚠ WARNING:

- *The high voltage system may remain powered for up to 10 minutes after the vehicle is shut off or disabled. To prevent serious injury or death from severe burns or electric shock, avoid touching, cutting, or breaching any orange high voltage power cable or high voltage component.*
- *The SRS may remain powered for up to 90 seconds after the vehicle is shut off or disabled. To prevent serious injury or death from unintentional SRS deployment, avoid breaching the SRS components.*
- *If none of the disabling procedures can be performed, proceed with caution as there is no assurance that the high voltage electrical system, SRS, or fuel pump are disabled*.

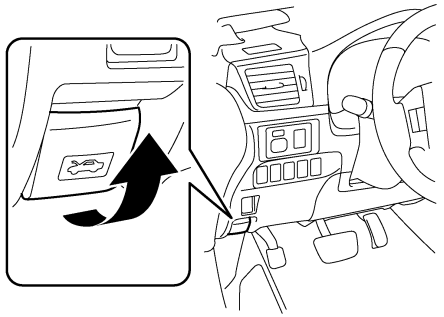

Remote Hood Release

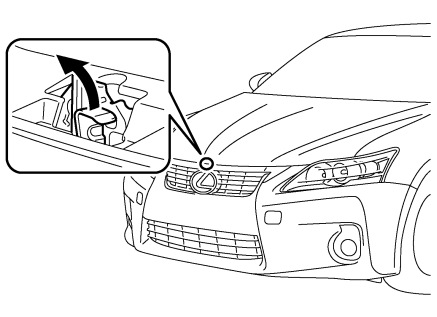

Hood Latch Release

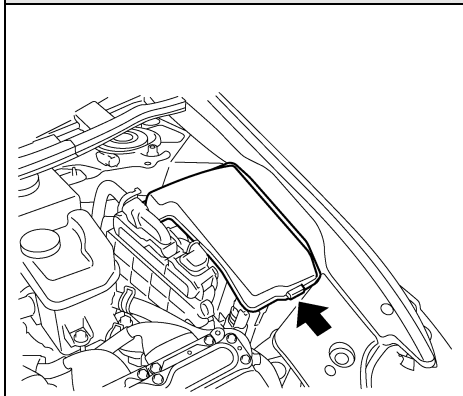

Remove Fuse Box Cover

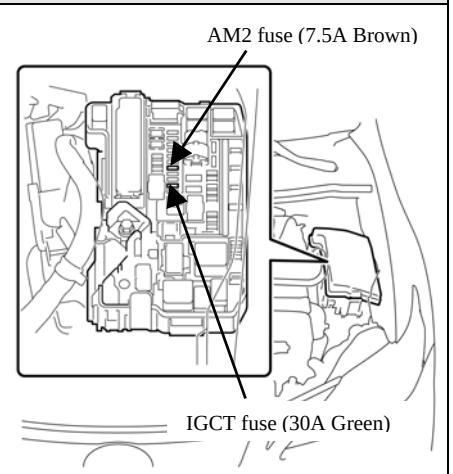

Location of IGCT and AM2 Fuses in Engine Compartment Fuse Box

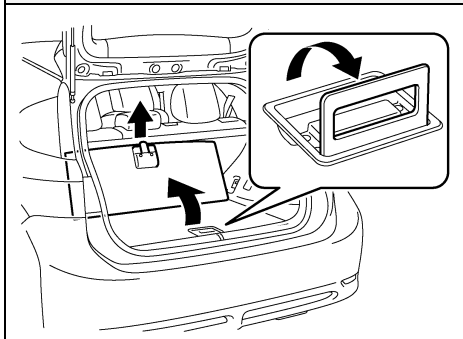

Open Center and Right Side Auxiliary Box

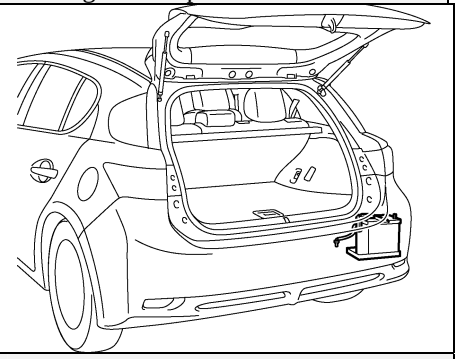

12 Volt Auxiliary Battery Mounted in Cargo Area

Emergency Response (Continued)

Extrication (Continued)

- Stabilize Vehicle

  Crib at (4) points directly under the front and rear pillars.
  Do not place cribbing under the high voltage power cables, exhaust system, or fuel system.

- Access Patients

  Glass Removal

  Use normal glass removal procedures as required.

  SRS Awareness

  Responders need to be cautious when working in close proximity to undeployed airbags and seat belt pretensioners. Front dual stage airbags automatically ignite both stages within a fraction of a second.

  Door Removal/Displacement

  Doors can be removed by conventional rescue tools such as hand, electric, and hydraulic tools. In certain situations, it may be easier to pry back the vehicle body to expose and unbolt the hinges.

  NOTE:

  - To prevent accidental airbag deployment when performing front door removal/displacement, ensure the vehicle is shut off and the 12 Volt auxiliary battery is disconnected.

  - The CT200h has a rear chassis damper (shock absorbing cylinder) mounted under the rear bumper to absorb body vibration and flex. This damper may be compromised in a fire or collision.

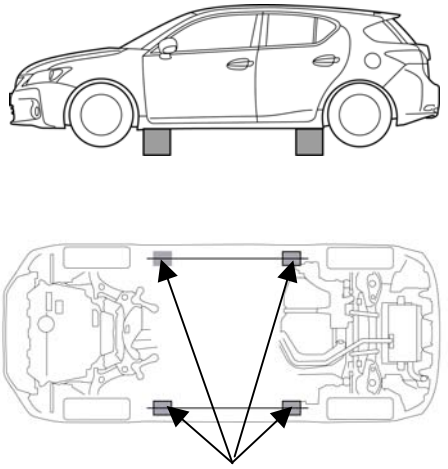

Cribbing Points

Cribbing Points

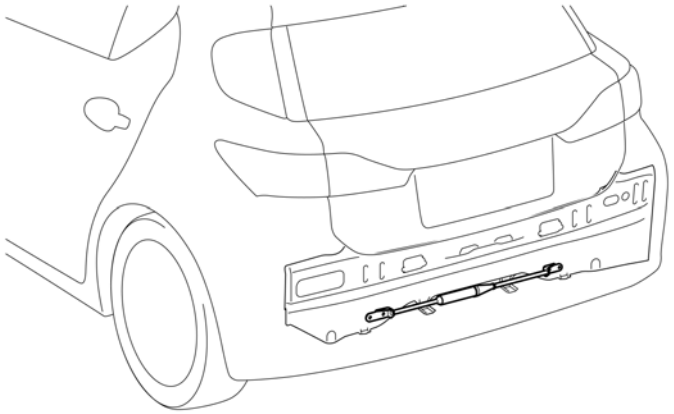

Rear Chassis Damper

Emergency Response (Continued)

Extrication (Continued)

Roof Removal

The CT200h is equipped with side curtain airbags. When undeployed, total roof removal is not recommended. Patient access through the roof can be performed by cutting the roof center section inboard of the roof rails as illustrated. This would avoid breaching the side curtain airbags, inflators, and wiring harness.

NOTE:
The side curtain airbags may be identified as illustrated on this page (additional component details on page 16).

Dash Displacement

The CT200h is equipped with side curtain airbags. When undeployed, total roof removal is not recommended to avoid breaching the side curtain airbags, inflators, and wiring harness. As an alternative, dash displacement may be performed by using a Modified Dash Roll.

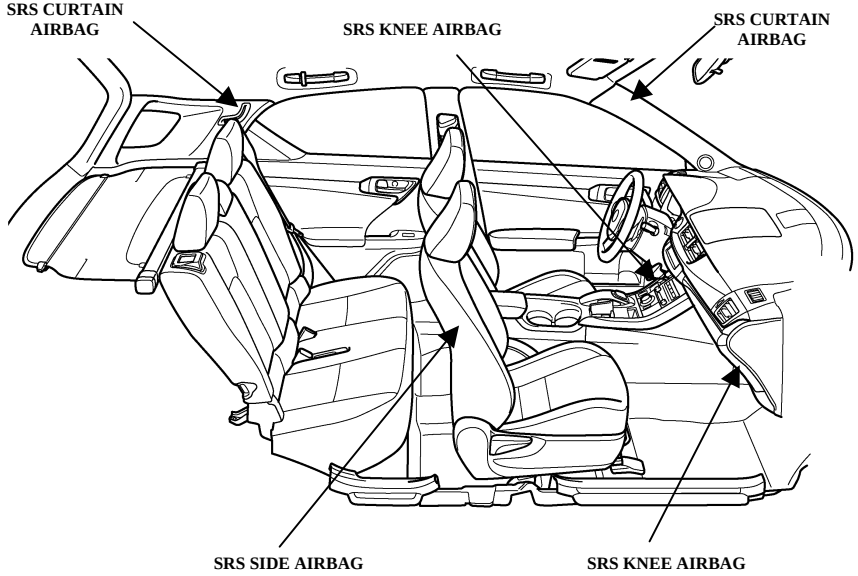

Side, Curtain, and Knee Airbag Identifiers

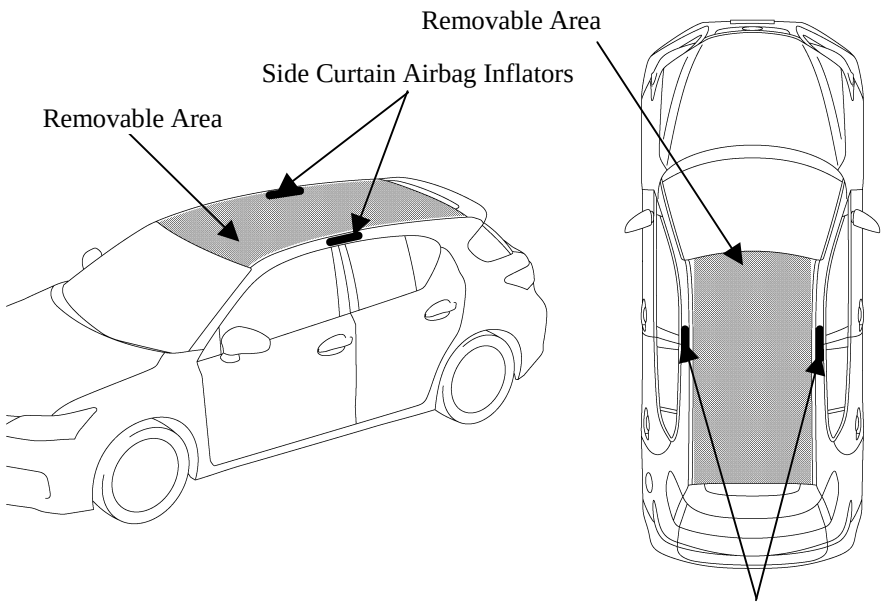

Roof Removal Area

Emergency Response (Continued)

Extrication (Continued)

Rescue Lift Air Bags

Responders should not place cribbing or rescue lift air bags under the high voltage power cables, exhaust system, or fuel system.

Repositioning Steering Wheel and Front Seats

Telescopic steering wheel and seat controls are shown in the illustrations.

NOTE:
The CT200h is equipped with an optional electrochromic auto dimming rear view mirror. The mirror contains a minimal amount of transparent gel sealed between two glass plates that will not normally leak.

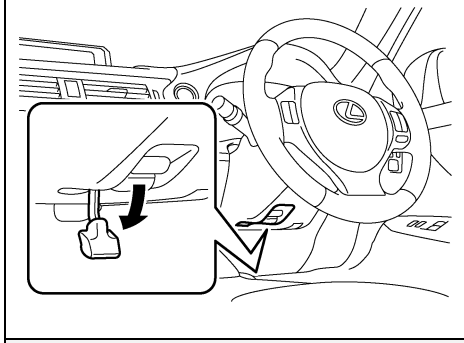

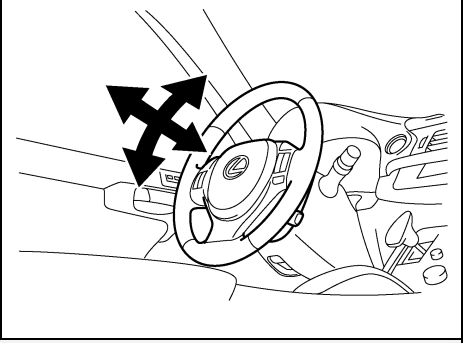

Manual Tilt and Telescoping Control

Manual Front Seat Controls

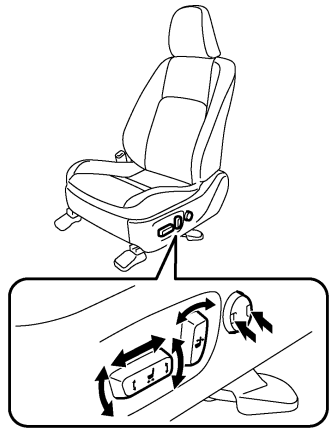

Optional Front Power Seat Controls

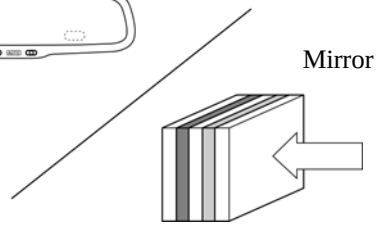

Mirror Cross Section

Sealed Electrochromic Coating

Electrochromic Auto Dimming Rear View Mirror

Emergency Response (Continued)

Fire

Approach and extinguish a fire using proper vehicle fire fighting practices as recommended by NFPA, IFSTA, or the National Fire Academy (USA).

- Extinguishing Agent
  Water has been proven to be a suitable extinguishing agent.

- Initial Fire Attack
  Perform a fast, aggressive fire attack.
  Divert the runoff from entering watershed areas.
  Attack teams may not be able to identify a CT200h until the fire has been knocked down and overhaul operations have commenced.

- Fire in the HV Battery Pack
  Should a fire occur in the NiMH HV battery pack, attack crews should utilize a water stream or fog pattern to extinguish any fire within the vehicle *except* for the HV battery pack.

⚠WARNING:

- *The NiMH battery electrolyte is a caustic alkaline (pH 13.5) that is damaging to human tissues. To avoid injury by coming in contact with the electrolyte, wear proper personal protective equipment.*
- *The battery modules are contained within a metal case and accessibility is limited.*
- *To avoid serious injury or death from severe burns or electric shock, **never** breach or remove the high voltage battery pack cover under any circumstance including fire.*

When allowed to burn themselves out, the CT200h NiMH battery modules burn rapidly and can quickly be reduced to ashes except for the metal.

Offensive Fire Attack

Normally, flooding an NiMH HV battery pack with copious amounts of water at a safe distance will effectively control the HV battery pack fire by cooling the adjacent NiMH battery modules to a point below their ignition temperature. The remaining modules on fire, if not extinguished by the water, will burn themselves out.

However, flooding the CT200h HV battery pack is *not* recommended due to the battery case design and location preventing the responder from properly applying water through the available vent openings safely. Therefore, it is recommended that the incident commander allow the CT200h HV battery pack to burn itself out.

Defensive Fire Attack

If the decision has been made to fight the fire using a defensive attack, the fire attack crew should pull back a safe distance and allow the NiMH battery modules to burn them selves out. During this defensive operation, fire crews may utilize a water stream or fog pattern to protect exposures or to control the path of smoke.

NOTE:

The CT200h has a rear chassis damper (shock absorbing cylinder) mounted in front of the rear bumper to absorb body vibration and flex. This damper may be compromised in a fire or collision.

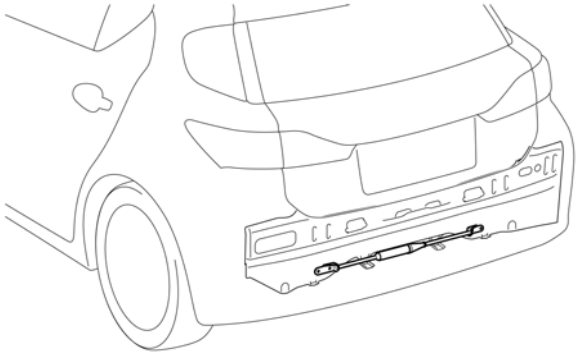

Rear Chassis Damper

Emergency Response (Continued)

Overhaul

During overhaul, immobilize and disable the vehicle if not already done. Refer to illustrations on page 18, 19 and 20. The HV battery cover should ***never*** be breached or removed under any circumstances including fire. Doing so may result in severe electrical burns, shock, or electrocution.

- Immobilize Vehicle
  Chock wheels and set the parking brake.
  Push the **P** switch to engage park (P).

- Disable Vehicle
  Performing either of the following two procedures will shut the vehicle off and disable the HV battery pack, SRS, and gasoline fuel pump.

Procedure #1

1. Confirm the status of the **READY** indicator in the instrument cluster.
2. If the **READY** indicator is illuminated, the vehicle is on and operational. Shut off the vehicle by pushing the power button once.
3. The vehicle is already shut off if the instrument cluster lights and the **READY** indicator are not illuminated. Do **not** push the power button because the vehicle may start.
4. If the smart key is easily accessible, keep it at least 16 feet (5 meters) away from the vehicle.
5. If the smart key cannot be found, disconnect the 12 Volt auxiliary battery behind the cover in the cargo area to prevent accidental restarting of the vehicle.

Procedure #2 (Alternate if power button is inaccessible)

1. Open the hood and remove the fuse box cover.
2. Remove the **IGCT** fuse (30A green colored) and **AM2** fuse (7.5A brown colored) in the engine compartment fuse box as illustrated on page 20. If the correct fuse cannot be recognized, pull all fuses in the fuse box.
3. Disconnect the 12 Volt auxiliary battery under the cover in the cargo area.

NOTE:
Before disconnecting the 12 Volt auxiliary battery, if necessary, reposition the optional power seats, lower the windows, unlock the doors, and open the fuel door as required. An electric fuel door opener switch is located on the lower dash panel to the left of the steering wheel. A manual fuel door release is located inside the driver side cargo area (refer to illustrations in the Roadside Assistance section on page 29). Once the 12 Volt auxiliary battery is disconnected, power controls will not operate.

⚠WARNING:

- *The high voltage system may remain powered for up to 10 minutes after the vehicle is shut off or disabled. To prevent serious injury or death from severe burns or electric shock, avoid touching, cutting, or breaching any orange high voltage power cable or high voltage component.*
- *The SRS may remain powered for up to 90 seconds after the vehicle is shut off or disabled. To prevent serious injury or death from unintentional SRS deployment, avoid breaching the SRS components.*
- *If none of the disabling procedures can be performed, proceed with caution as there is no assurance that the high voltage electrical system, SRS, or fuel pump are disabled.*

Recovering/Recycling of NiMH HV Battery Pack

Clean up of the HV battery pack can be accomplished by the vehicle recovery crew without further concern of runoff or spillage. For information regarding recycling of the HV battery pack, contact the nearest Lexus dealer:

Emergency Response (Continued)

Spills

The CT200h contains the same common automotive fluids used in other non-hybrid Lexus vehicles, with the exception of the NiMH electrolyte used in the HV battery pack. The NiMH battery electrolyte is a caustic alkaline (pH 13.5) that is damaging to human tissues. The electrolyte, however, is absorbed in the cell plates and will not normally spill or leak out even if a battery module is cracked. A catastrophic crash that would breach both the metal battery pack case and a battery module would be a rare occurrence.

Similar to the use of baking soda to neutralize a lead-acid battery electrolyte spill, a dilute boric acid solution or vinegar can be used to neutralize a NiMH battery electrolyte spill.

NOTE:
Electrolyte leakage from the HV battery pack is unlikely due to its construction and the amount of available electrolyte contained within the NiMH modules. Any spillage would not warrant a declaration as a hazardous material incident. Responders should follow the recommendations as outlined in this emergency response guide.

In an emergency, manufacturer's Material Safety Data Sheets (MSDS) are available by contacting:

- Handle NiMH electrolyte spills using the following Personal Protective Equipment (PPE):
  Splash shield or safety goggles. Fold down helmet shields are not acceptable for acid or electrolyte spills.
  Rubber, latex or nitrile gloves.
  Apron suitable for alkaline.
  Rubber boots.

- Neutralize NiMH Electrolyte
  Use a boric acid solution or vinegar.
  Boric acid solution - 800 grams boric acid to 20 liters water or 5.5 ounces boric acid to 1 gallon of water.

First Aid

Emergency responders may not be familiar with a NiMH electrolyte exposure when rendering aid to a patient. Exposure to the electrolyte is unlikely except in a catastrophic crash or through improper handling. Utilize the following guidelines in the event of exposure.

> ⚠ **WARNING:**
> *The NiMH battery electrolyte is a caustic alkaline (pH 13.5) that is damaging to human tissues. To avoid injury by coming in contact with the electrolyte, wear proper personal protective equipment.*

- Wear Personal Protective Equipment (PPE)
  Splash shield or safety goggles. Fold down helmet shields are not acceptable for acid or electrolyte spills.
  Rubber, latex or nitrile gloves.
  Apron suitable for alkaline.
  Rubber boots.

- Absorption
  Perform gross decontamination by removing affected clothing and properly disposing of the garments.
  Rinse the affected areas with water for 20 minutes.
  Transport patients to the nearest emergency medical care facility.

- Inhalation in Non-Fire Situations
  No toxic gases are emitted under normal conditions.

- Inhalation in Fire Situations
  Toxic gases are given off as by-products of combustion. All responders in the Hot Zone should wear the proper PPE for fire fighting including SCBA.
  Move a patient from the hazardous environment to a safe area and administer oxygen.
  Transport patients to the nearest emergency medical care facility.

- Ingestion
  Do not induce vomiting.
  Allow the patient to drink large quantities of water to dilute the electrolyte (never give water to an unconscious person).

Emergency Response (Continued)

First Aid (Continued)

If vomiting occurs spontaneously, keep the patient's head lowered and forward to reduce the risk of asphyxiation.
Transport patients to the nearest emergency medical care facility.

Submersion

A submerged hybrid vehicle does not have high voltage potential on the metal vehicle body, and is safe to touch.

Access Patients

Responders can access the patient and perform normal extrication procedures. High voltage orange color coded power cables and high voltage components should never be touched, cut, or breached.

Vehicle Recovery

If a hybrid vehicle is fully or partially submerged in water, emergency responders may not be able to determine if the vehicle has been automatically disabled. The CT200h may be handled by following these recommendations:

1. Remove the vehicle from the water.
2. Drain the water from the vehicle if possible.
3. Follow the immobilizing and disabling procedures on page 18, 19 and 20.

Roadside Assistance

The CT200h utilizes an electronic shift selector and a P switch for selecting park (P). If the 12 Volt auxiliary battery is discharged or disconnected, the vehicle cannot be started nor can it be shifted out of park (P). If discharged, the 12 Volt auxiliary battery can be jump started to allow vehicle starting and shifting out of park (P). Most other roadside assistance operations may be handled like conventional Lexus vehicles.

Lexus Roadside Assistance is available during the basic warranty period by contacting:

Towing

The CT200h is a front wheel drive vehicle and it **must** be towed with the front wheels off the ground. Failure to do so may cause serious damage to Lexus Hybrid Drive components.

- The vehicle may be shifted out of park (P) into neutral (N) when in either the ignition-on or READY-on mode. To select neutral (N), it is necessary to hold the shift selector in the N position for approximately 0.5 seconds.
- If the 12 Volt auxiliary battery is discharged, the vehicle will not start and shifting out of park (P) is not possible. There is no manual override except to jump start the vehicle, refer to Jump Starting on page 31.

- If a tow truck is not available, in an emergency the vehicle may be moved at low speeds (18 mph (30 km/h)). The eyelet is located with the tools in the cargo area of the vehicle, refer to the illustration on page 30.

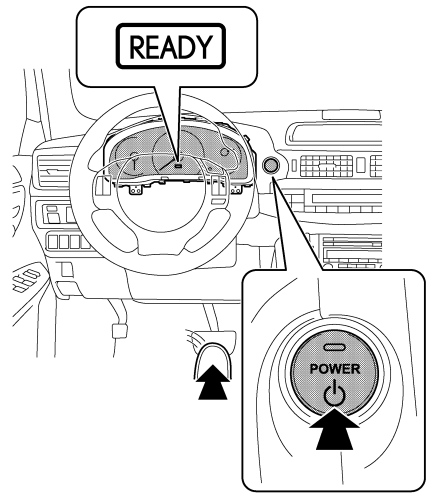

Starting Vehicle

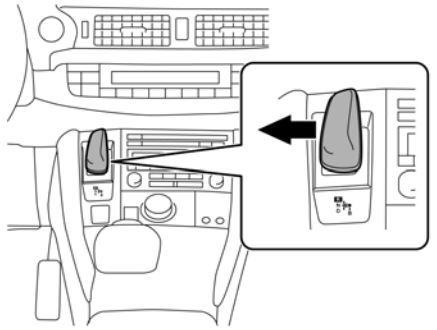
Move Shift Selector to N Position

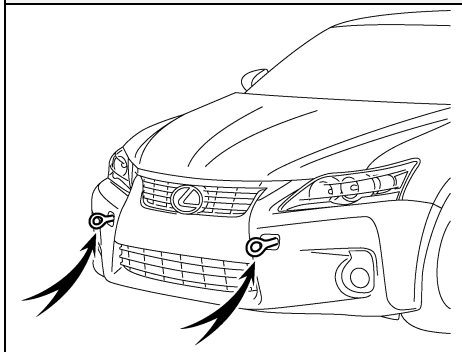
Towing Eyelet Mounting Location

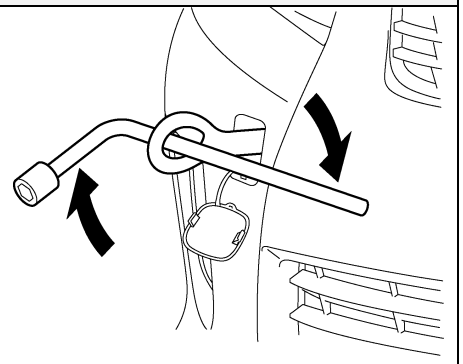
Eyelet Installation

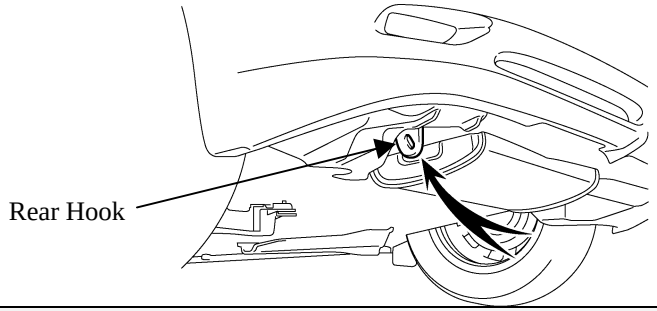

Rear Hook Location

Roadside Assistance (Continued)

Electric Hatch Opener

The CT200h is equipped with an electric hatch opener. In the event of 12 Volt power losses, the hatch cannot be opened from the outside of the vehicle.

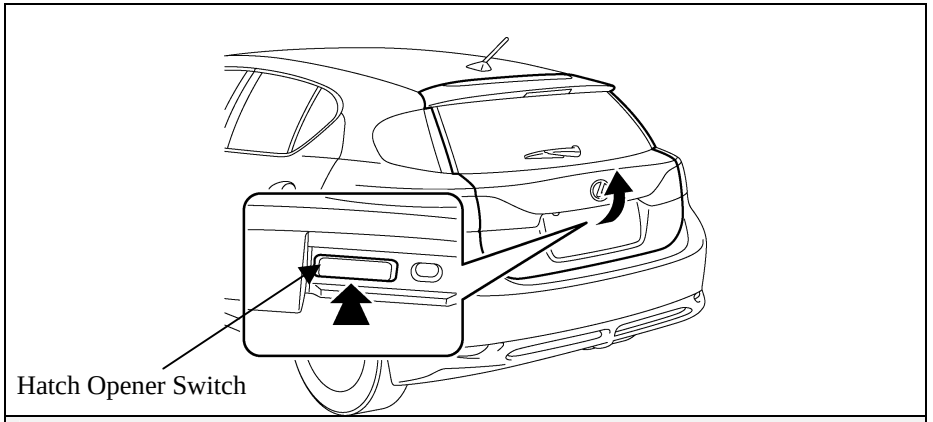

Electric Hatch Opener Switch

The electric hatch can be opened manually using the release as shown in the illustration.

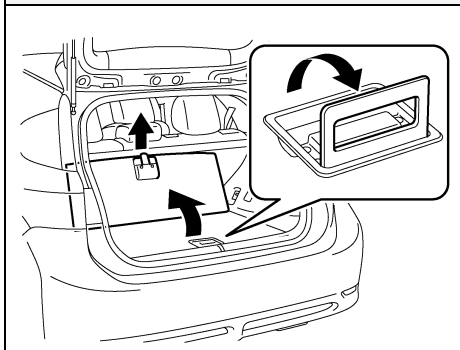

Open Center Auxiliary Box

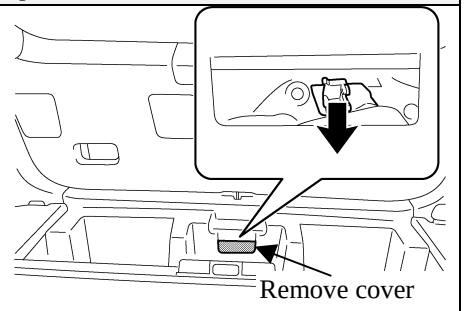

Back Hatch, Viewed from Inside Vehicle

Manual Hatch Release

Electric Fuel Door Opener

The CT200h is equipped with an electric fuel door opener. In the event of 12 Volt power losses, the fuel door can only be opened using the manual release located inside the cargo area.

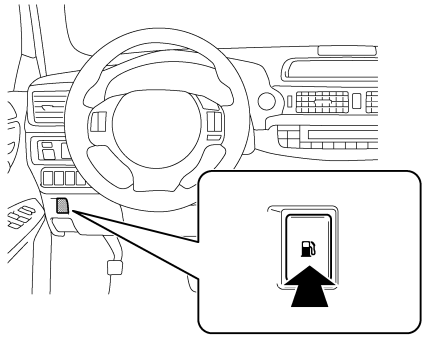

Electric Fuel Door Opener Switch

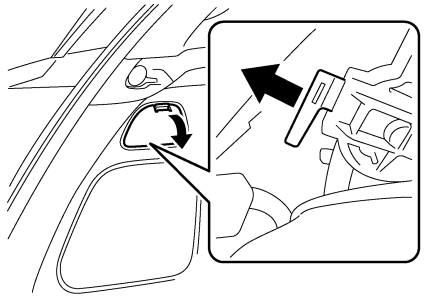

Manual Fuel Door Release

Roadside Assistance (Continued)

Spare Tire

The jack, tools, towing eyelet and spare tire are provided as shown.

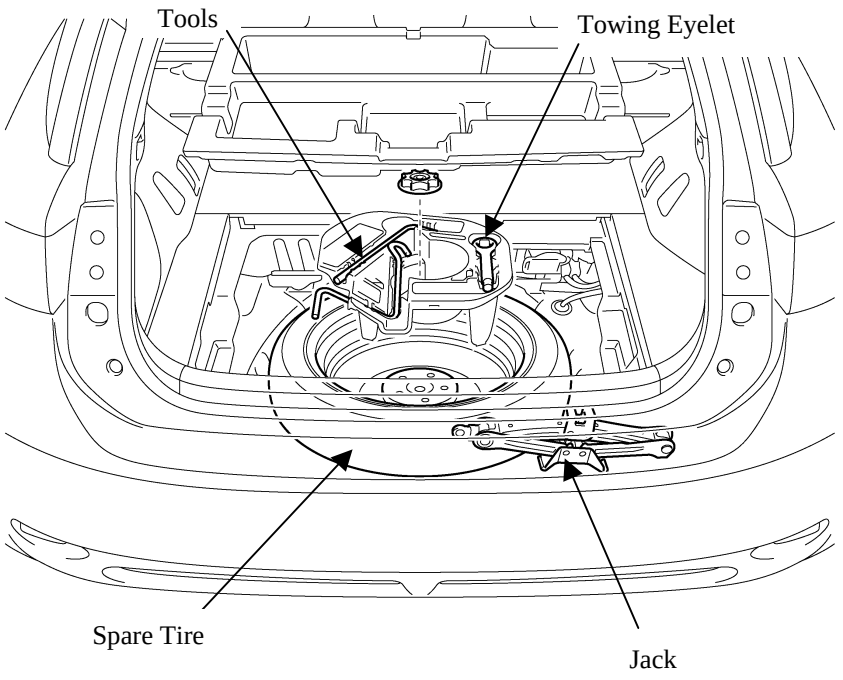

Tools, Jack, Towing Eyelet and Spare Tire in the Cargo Area

Roadside Assistance (Continued)

Jump Starting

The 12 Volt auxiliary battery may be jump started if the vehicle does not start and the instrument cluster gauges are dim or off after depressing the brake pedal and pushing the power button.

The 12 Volt auxiliary battery is located in the cargo area. If the 12 Volt auxiliary battery is discharged, the hatch cannot be opened. Instead, the vehicle can be jump started by accessing the remote positive 12 Volt auxiliary battery terminal in the engine compartment fuse box.

- Remove the fuse box cover, and open the positive terminal cover.
- Connect the positive jumper cable to the positive terminal.
- Connect the negative jumper cable to a solid ground.
- Place the smart key in proximity to the interior of the vehicle, depress the brake pedal, and push the power button.

  NOTE:
  If the vehicle does not recognize the smart key after connecting the booster battery to the vehicle, open and close the driver door when the vehicle is shut off.

  If the smart key internal battery is dead, touch the Lexus emblem side of the smart key to the power button during the start sequence. Refer to the instructions and illustrations on page 9 for more details.

- The high voltage HV battery pack cannot be jump started.

Immobilizer & Anti-Theft Alarm

The CT200h is equipped with a standard immobilizer system and an optional anti-theft alarm.

- The vehicle can be started only with a registered smart key.
- To disarm the anti-theft alarm, unlock the door by using the smart key button, hidden metal cut key, or door handle touch sensor. Turning the ignition-on or starting the vehicle will also disarm the anti-theft alarm.

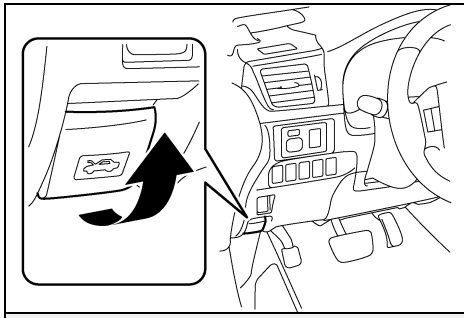

Remote Hood Release

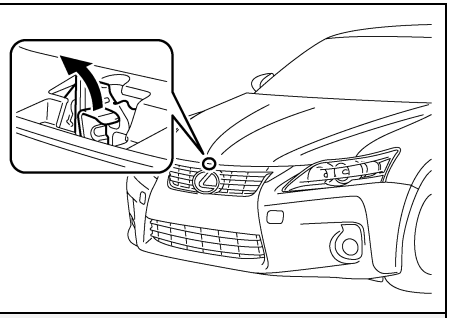

Hood Latch Release

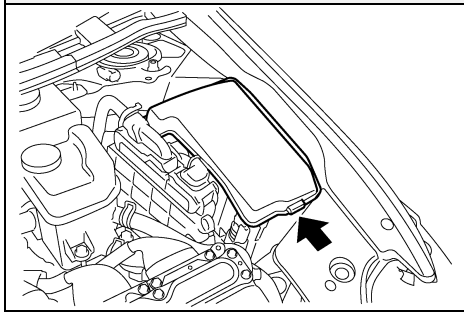

Remove Fuse Box Cover

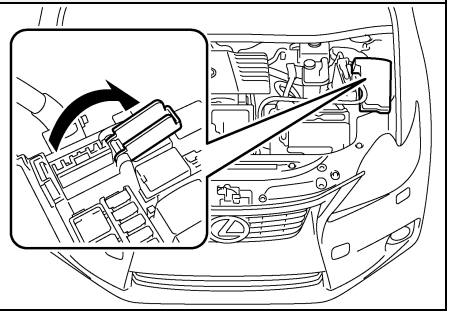

Open Positive Terminal Cover

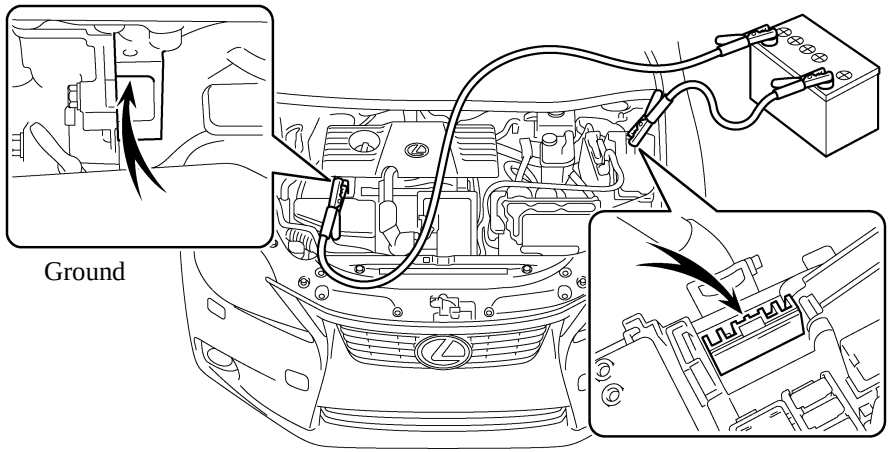

Jumper Cable Connections